Dwight Look College of
ENGINEERING
TEXAS A&M UNIVERSITY

ECEN 404 Final Presentation

Team 12: TI-Amplifier
Braeden Murdock
Cole Keating
Haotian Guan
Jonathan Roman
TA: Vishwam Raval
Sponsor: Texas Instruments

Project Summary

Problem statement:

- Needs a system that can wirelessly amplify the sound of a 8Ω speaker from a mobile app.

Our Solution:

- The system being developed will use a MCU to communicate with a mobile app in order to control a system of amplifiers to adjust volume and EQ of the speaker using a aux input.

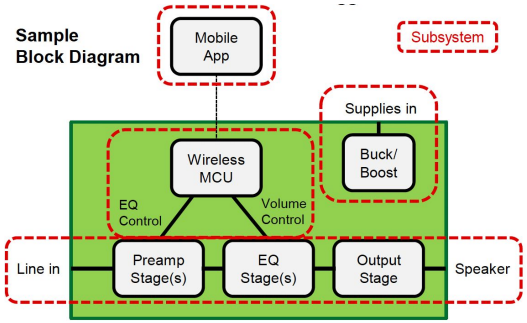

System Overview

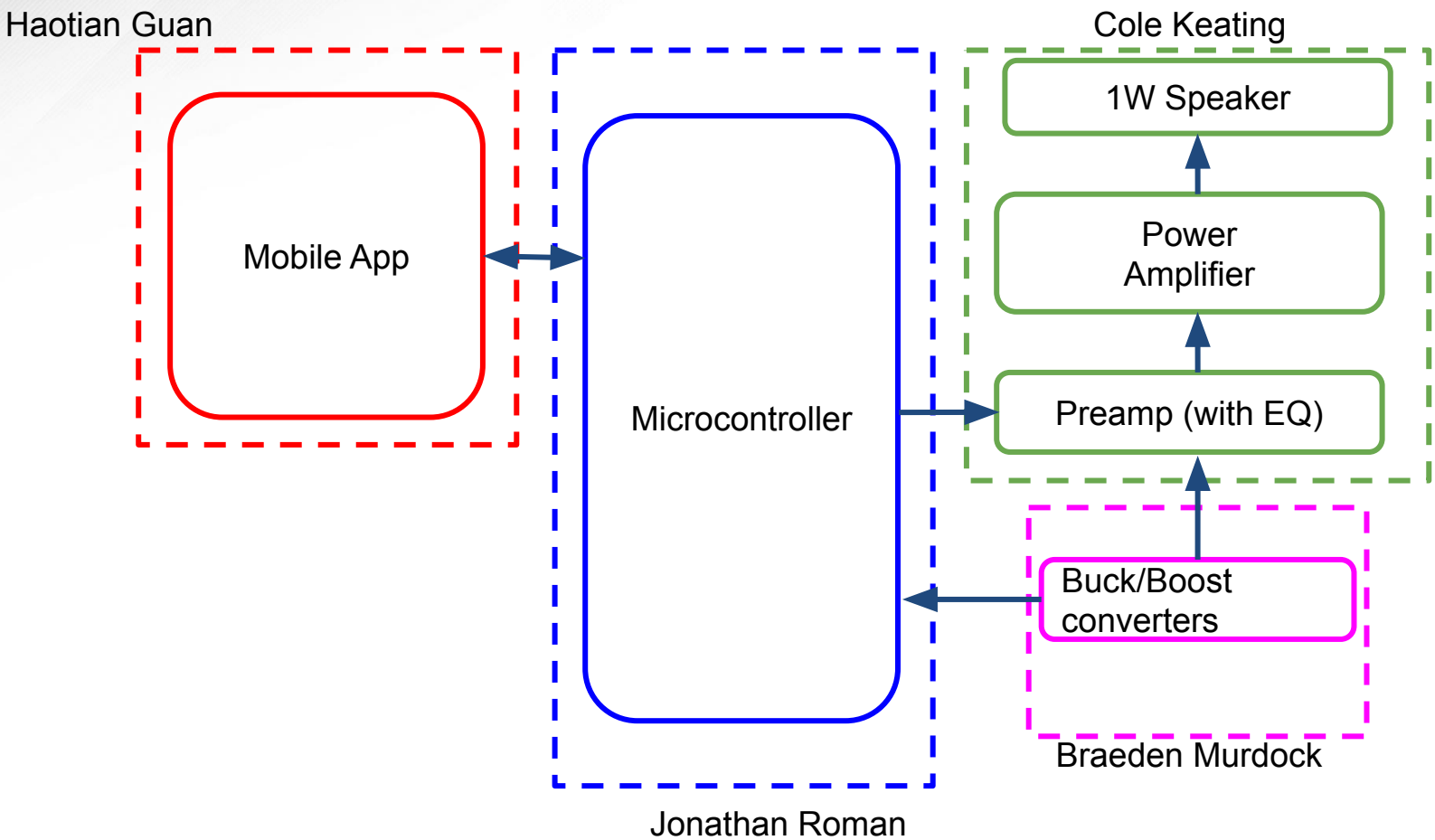

Major Project Changes for 404 (45 sec)

Additional Tasks Taken on my Group Members:

Braedon Murdock:

- Integrated PCB Design

Cole Keating:

- Custom Power Amp Design

Isaac Roman:

- Final Integration Casing Design
- Integrated PCB Design (assistance)

No Major Project Changes at this time

Project Timeline

System Integration Planning

Define integration strategy between subsystems Confirm interfaces for:
Power Supplies ↔ Analog Frontend;
Software ↔ Digital Interface

Validation, Debugging and Data Transfer

Validate Altium schematics against original KiCad design
Validate reliable BLE data transfer between App and MCU

01/12/26

01/19/26

01/26/26

02/02/26

Initial Integration and Communication Setup

Translating KiCad-based schematics to Altium
Establish BLE connection between Mobile App and MCU

Continued Debugging and Refinement

Continue debugging power, analog, and digital subsystems
Address integration issues discovered during system testing

Dwight Look College of
ENGINEERING
TEXAS A&M UNIVERSITY

Subsystem 1 - Mobile App

Haotian Guan

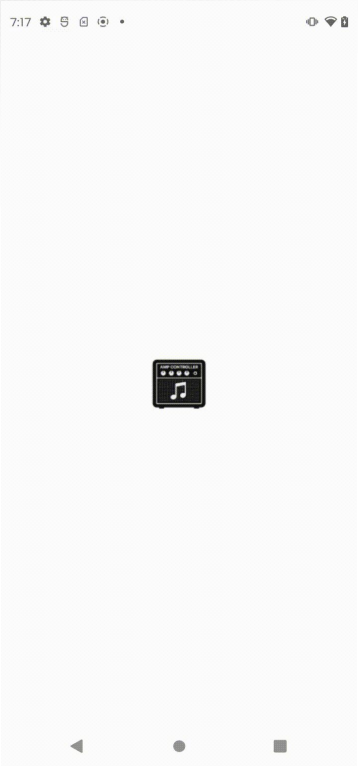

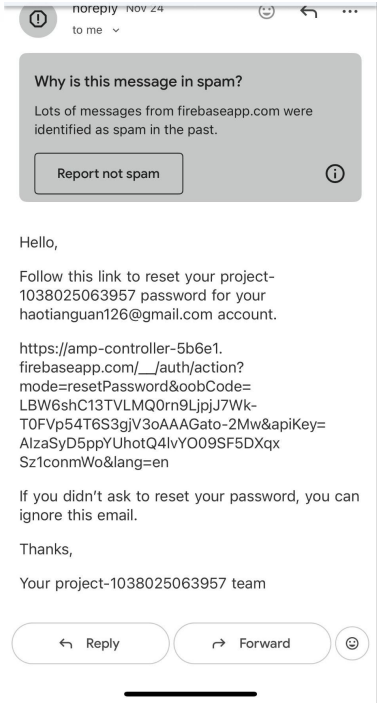

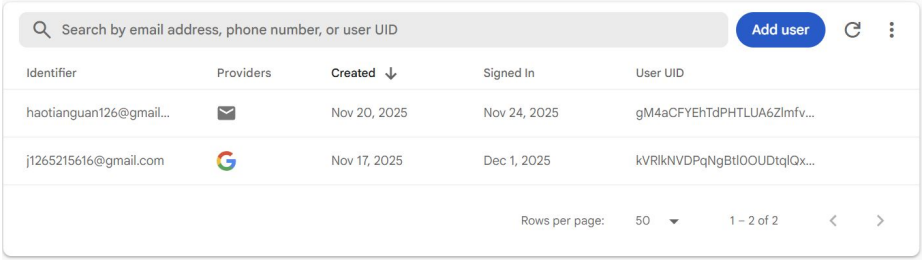

Dwight Look College of
ENGINEERING
TEXAS A&M UNIVERSITY

Subsystem 1 - Mobile App

Haotian Guan

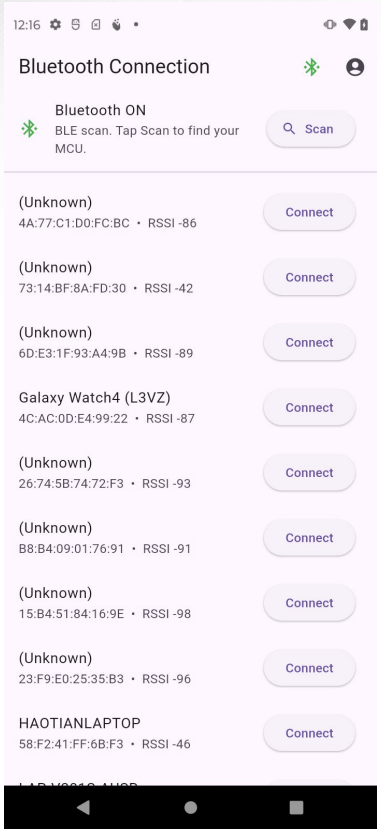


```
D/[FBP-Android](17452): [FBP]   status: 0GATT_SUCCESS
D/BluetoothGatt(17452): onConnectionUpdated() - Device=74:4D:BD:68:61:3E interval=39 latency=0 timeout=500 status=0
D/[FBP-Android](17452): [FBP] onMethodCall: setNotifyValue
D/BluetoothGatt(17452): setCharacteristicNotification() - uuid: 00002a05-0000-1000-8000-00805f9b34fb enable: true
D/[FBP-Android](17452): [FBP] onDescriptorWrite:
D/[FBP-Android](17452): [FBP]   chr: 2a05
D/[FBP-Android](17452): [FBP]   desc: 2902
D/[FBP-Android](17452): [FBP]   status: GATT_SUCCESS (0)
D/[FBP-Android](17452): [FBP] onMethodCall: writeCharacteristic
D/[FBP-Android](17452): [FBP] onCharacteristicWrite:
D/[FBP-Android](17452): [FBP]   chr: df170f02-3641-4594-806d-c113a27ce6cb
D/[FBP-Android](17452): [FBP]   status: GATT_SUCCESS (0)
I/flutter (17452): [BLE WRITE] port=2 value=13
I/flutter (17452): [FBP] stopScan: already stopped
D/[FBP-Android](17452): [FBP] onMethodCall: writeCharacteristic
D/[FBP-Android](17452): [FBP] onCharacteristicWrite:
D/[FBP-Android](17452): [FBP]   chr: df170f02-3641-4594-806d-c113a27ce6cb
D/[FBP-Android](17452): [FBP]   status: GATT_SUCCESS (0)
I/flutter (17452): [BLE WRITE] port=0 value=30
D/[FBP-Android](17452): [FBP] onMethodCall: writeCharacteristic
D/[FBP-Android](17452): [FBP] onCharacteristicWrite:
D/[FBP-Android](17452): [FBP]   chr: df170f02-3641-4594-806d-c113a27ce6cb
D/[FBP-Android](17452): [FBP]   status: GATT_SUCCESS (0)
I/flutter (17452): [BLE WRITE] port=1 value=0
D/[FBP-Android](17452): [FBP] onMethodCall: writeCharacteristic
D/[FBP-Android](17452): [FBP] onCharacteristicWrite:
D/[FBP-Android](17452): [FBP]   chr: df170f02-3641-4594-806d-c113a27ce6cb
D/[FBP-Android](17452): [FBP]   status: GATT_SUCCESS (0)
I/flutter (17452): [BLE WRITE] port=2 value=0
D/[FBP-Android](17452): [FBP] onMethodCall: writeCharacteristic
D/[FBP-Android](17452): [FBP] onCharacteristicWrite:
D/[FBP-Android](17452): [FBP]   chr: df170f02-3641-4594-806d-c113a27ce6cb
D/[FBP-Android](17452): [FBP]   status: GATT_SUCCESS (0)
I/flutter (17452): [BLE WRITE] port=3 value=0
D/BluetoothGatt(17452): onClientConnectionState() - status=0 clientIf=6 device=74:4D:BD:68:61:3E
D/[FBP-Android](17452): [FBP] onConnectionStateChange:disconnected
D/[FBP-Android](17452): [FBP]   status: SUCCESS
D/BluetoothGatt(17452): close()
```

Dwight Look College of
ENGINEERING
TEXAS A&M UNIVERSITY

Subsystem 1 - Mobile App

Haotian Guan

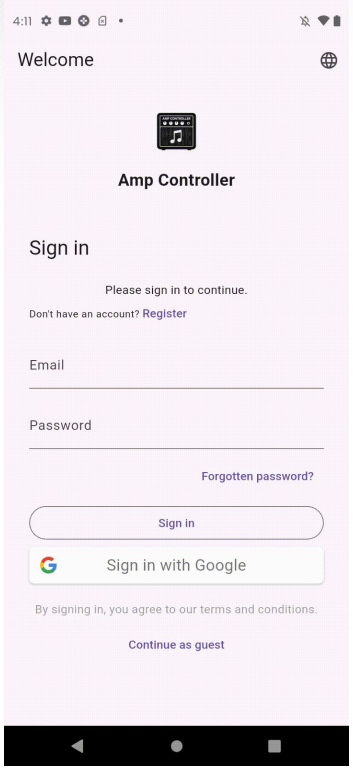

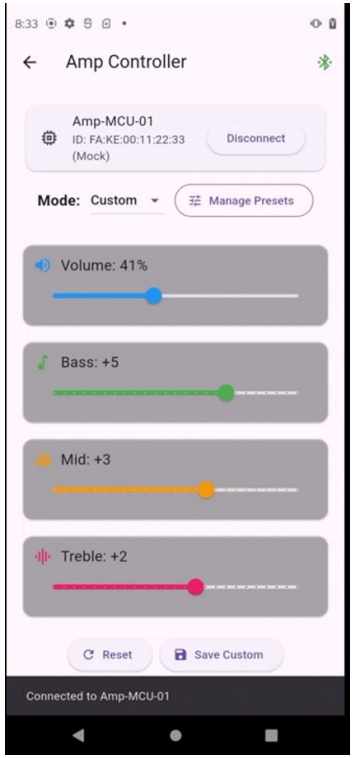

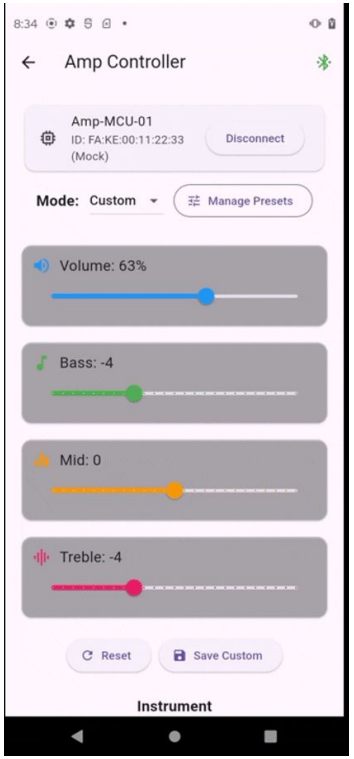

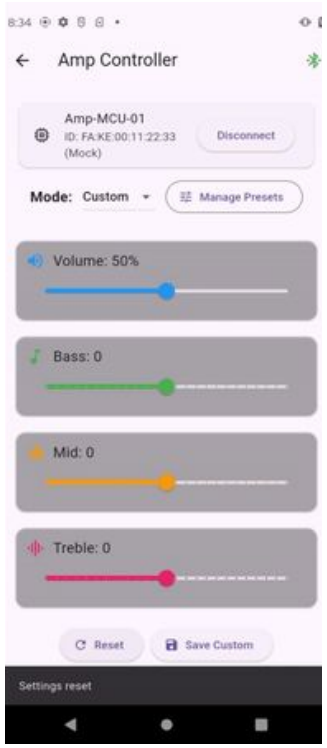

Subsystem 1 - Mobile App

Haotian Guan

Accomplishments since ECEN 403 25 hrs of effort	Ongoing progress/problems and plans until the next presentation
• Build the overall application architecture using Flutter • Implement Firebase login and user verification • Complete the BLE scanning and connection • Design and implement the volume and EQ control interface • Resolve issues such as connection stability and UI overflow. • Implement localization	• Complete localization for the Firebase login page • Complete cloud data management • Continue testing with Jonathan that connection and data transmission from mobile app to MCU

Subsystem 2 - Microcontroller

Jonathan Roman

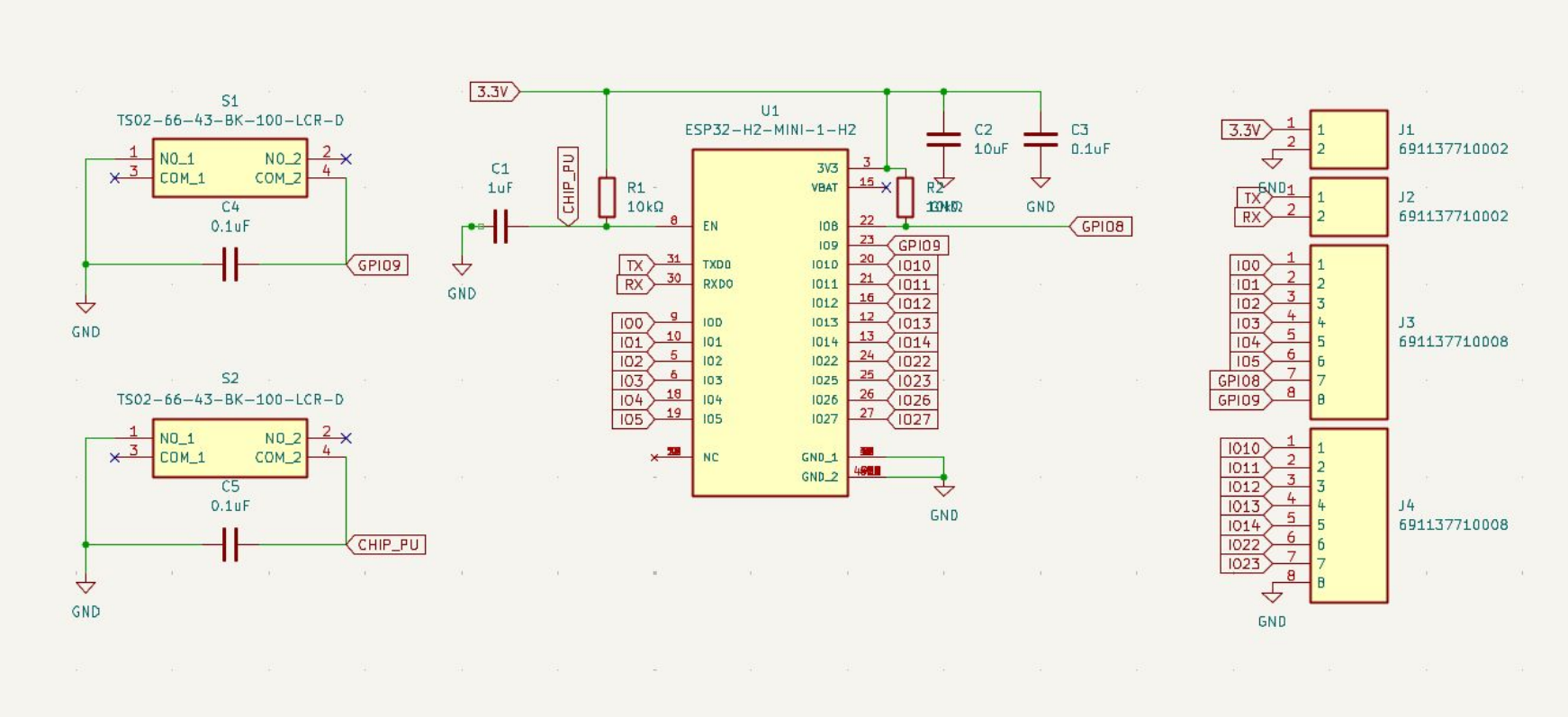

Subsystem 2 - Microcontroller

Jonathan Roman

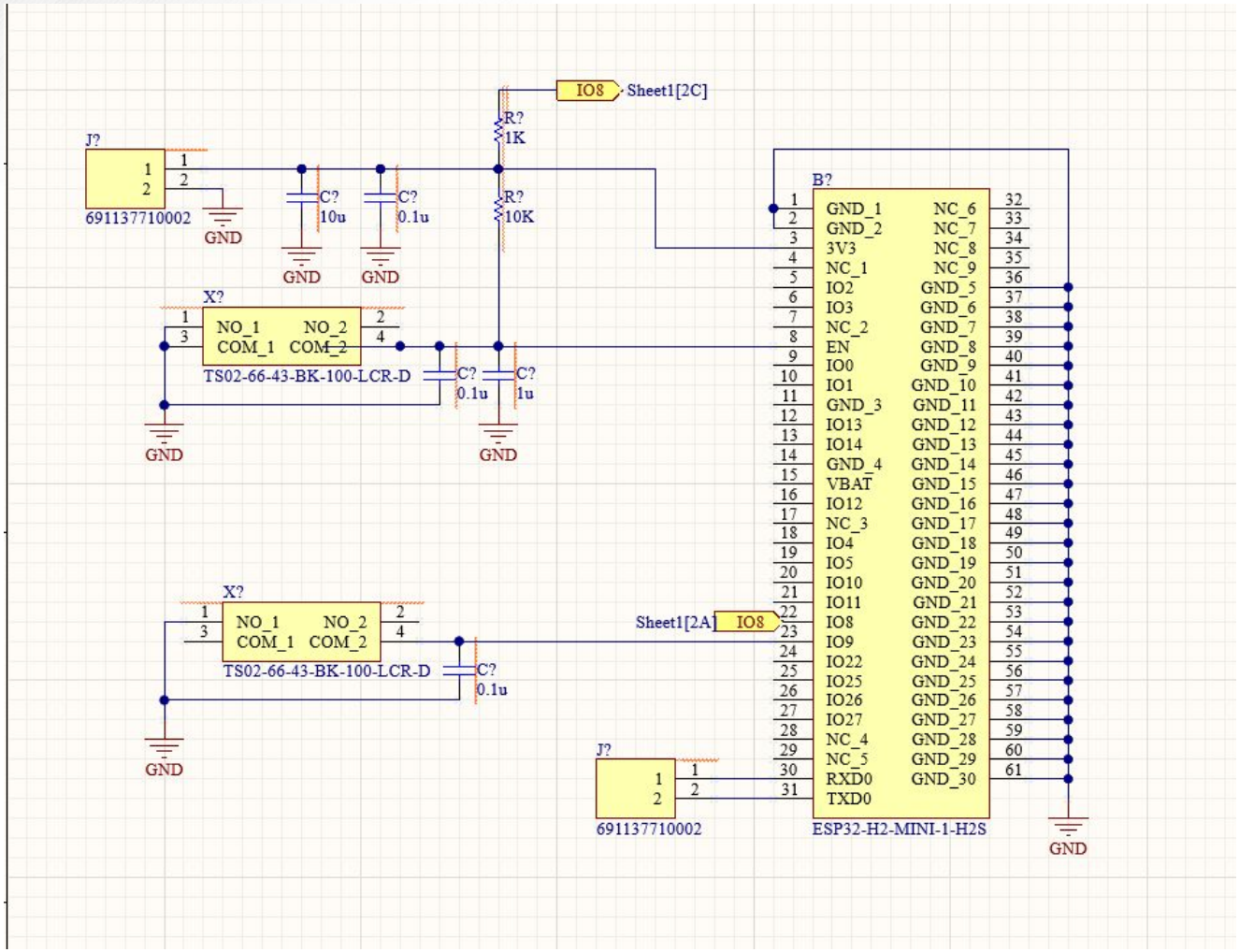

Subsystem 2 - Microcontroller

Jonathan Roman

Accomplishments since ECEN 403 22 hrs of effort	Ongoing progress/problems and plans until the next presentation
• Redesigned and reordered MCU pcb in Kicad • Recreated updated design in Altium for group integration • Assisted with BLE connection with Mobile App	• Polish Altium design for smoother integration • Acquire parts and begin soldering updated board for verification

Subsystem 3 - Amplifier

Cole Keating

Design and Requirements:

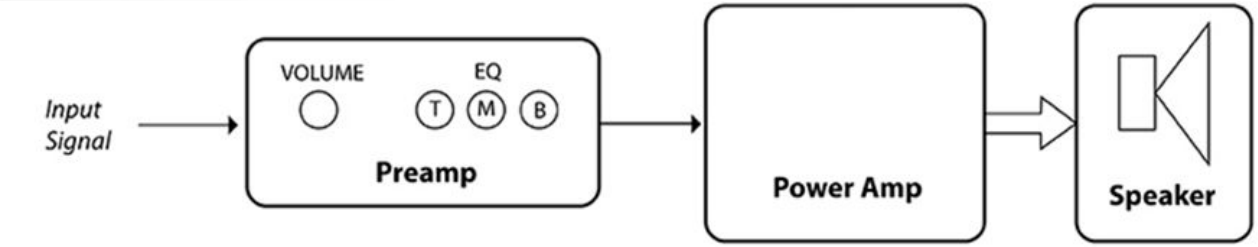

Preamp

- 3 Band EQ: can boost/attenuate low, mid, high frequencies.
- Digital potentiometers from MCU will control low/mid/high frequency gain, as well as volume control
- OPA1656 dual op amp selected - new, low noise design

Power Amp

- Must provide 1W of power to an 8Ω speaker
- THD requirements:
  <1% at 5W RMS,
  <0.1% at 1W RMS
- Can use OTS (off-the-shelf) amplifier

Subsystem 3 - Preamplifier

Cole Keating

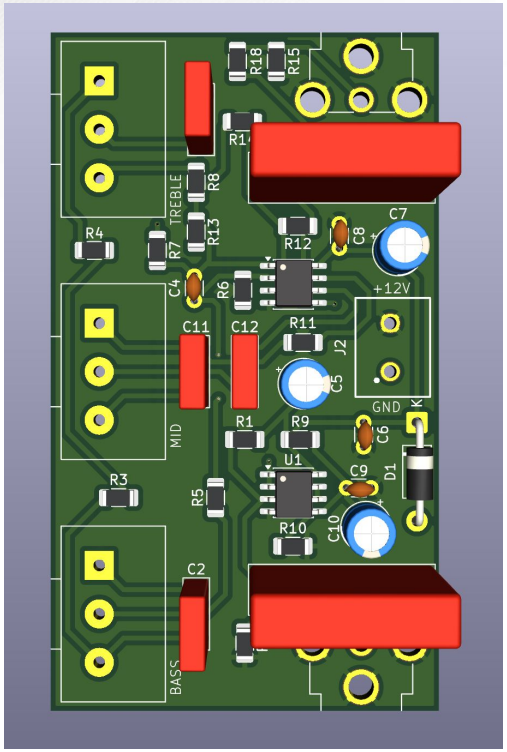

Existing design from 403

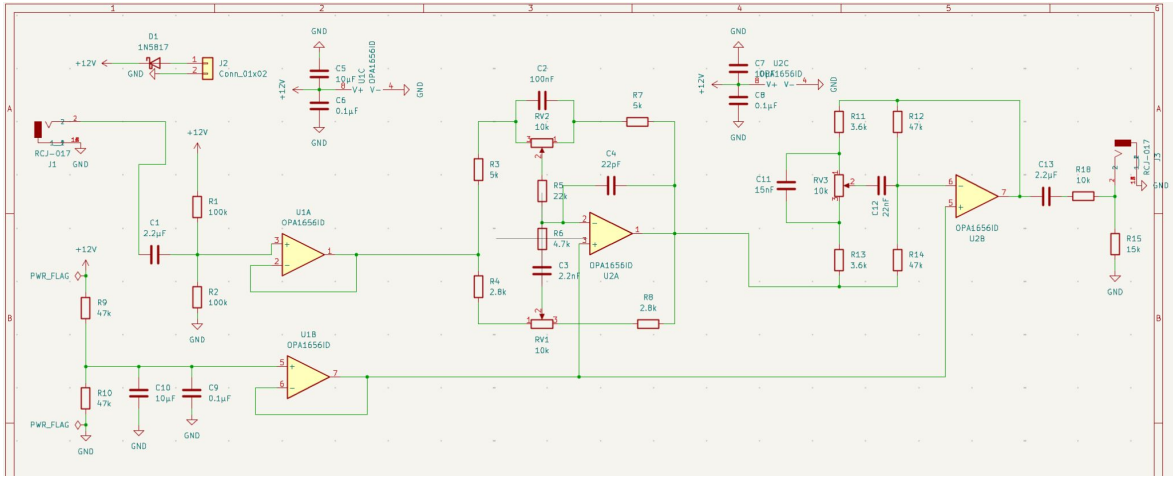

Standalone preamplifier schematic

Subsystem 3 - Power Amplifier

Cole Keating

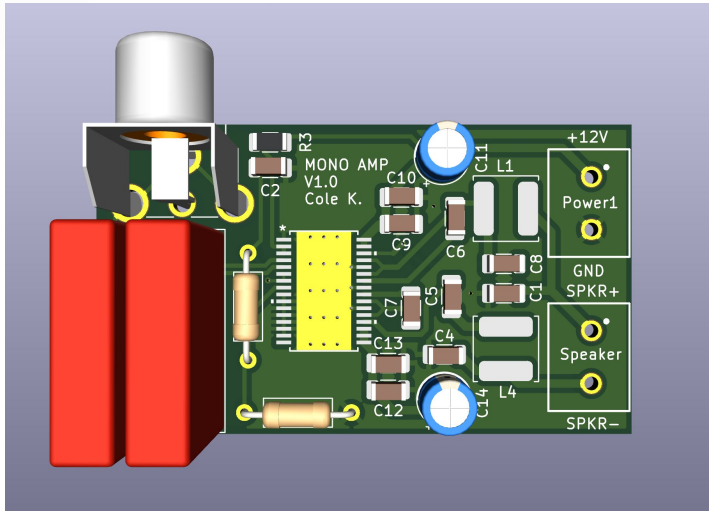

My TPA3116-based power amplifier

TI's TPA3116-based power amplifier

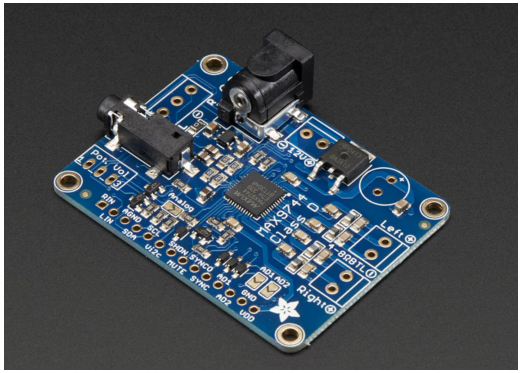

MAX9744-based design

Subsystem 3 - Preamplifier Integration

Cole Keating

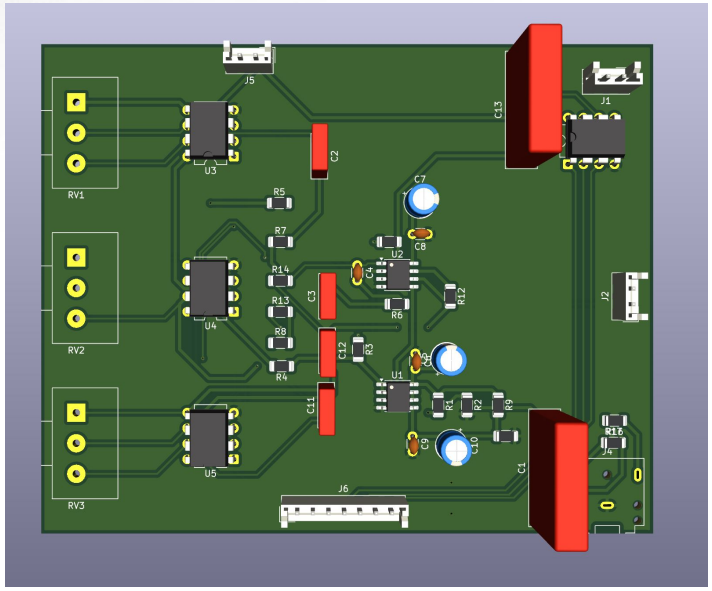

- New schematic was made replacing physical pots with digital pots to begin process of integrating MCU control
- This was done in KiCad, but we’ve agreed to use Altium for all designs moving forward
- Power amplifier will stay on separate PCB, but all low power subsystems will be on same board (Power, MCU, Preamp).

Subsystem 3 - Amplifier

Cole Keating

Accomplishments since ECEN 403 20 hrs of effort	Ongoing progress/problems and plans until the next presentation
• Redesigned preamplifier to incorporate digital potentiometers • Researched SPI vs I2C control, confirmed protocol for MCU integration • Selected digital potentiometer that met design requirements (MCP4151) • Updated existing preamplifier design to incorporate digital potentiometers to aid in integration • Ordered and began examining TPA3116 power amplifier eval. board	• Finish debugging my TPA3116-based design with the help of the EVM • Test selected digital potentiometers before committing them to the PCB • Ensure no errors when translating KiCad based schematics to Altium • Work with Braeden to integrate our designs • Get PCBs ordered early

Power System

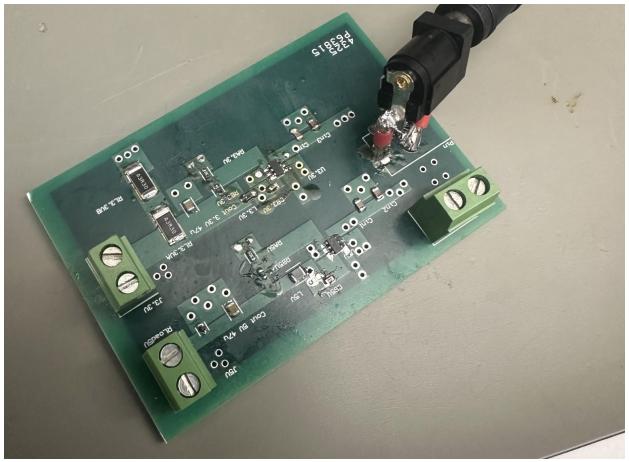

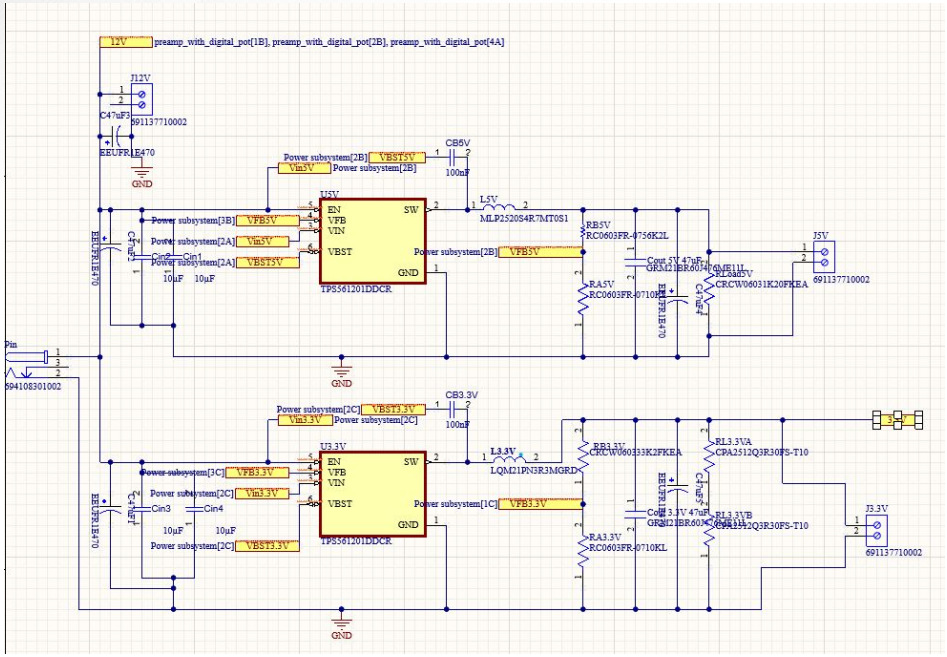

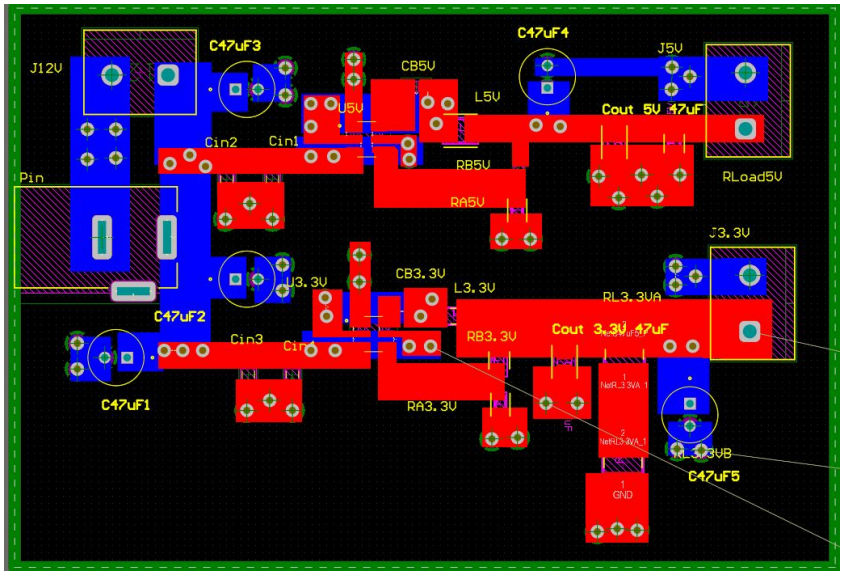

Preamplifier

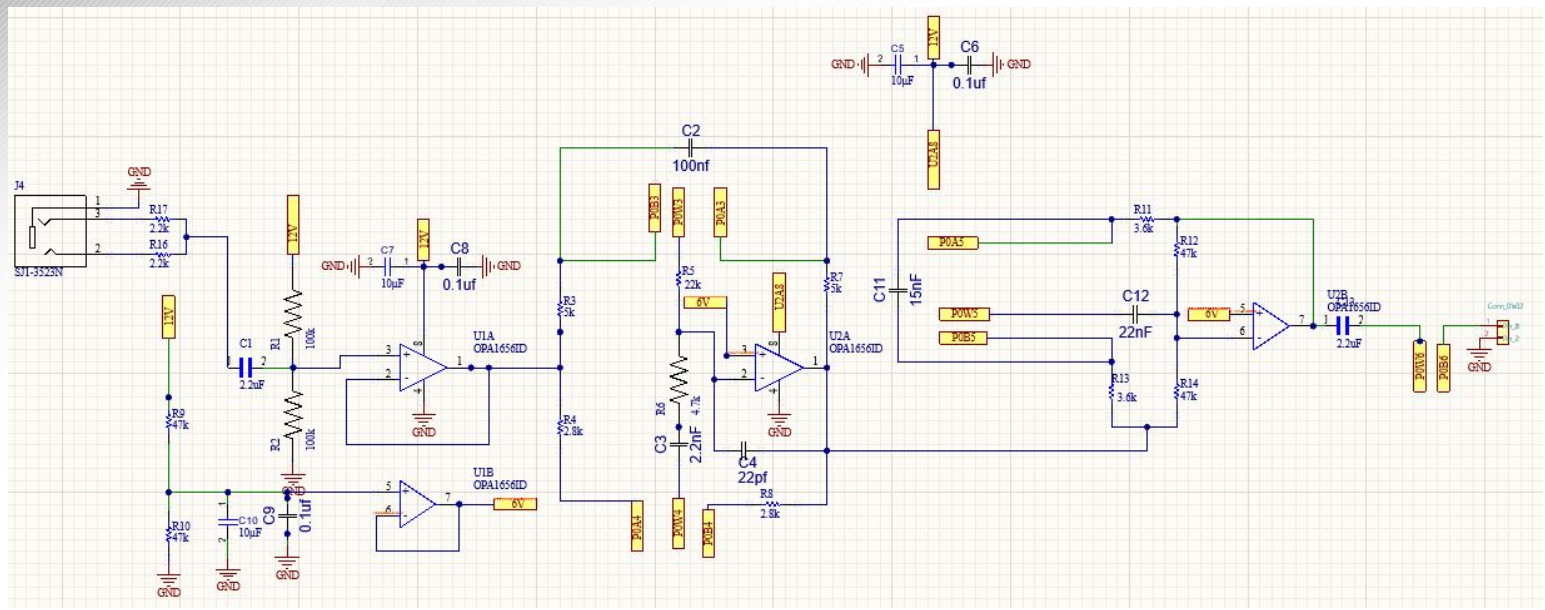

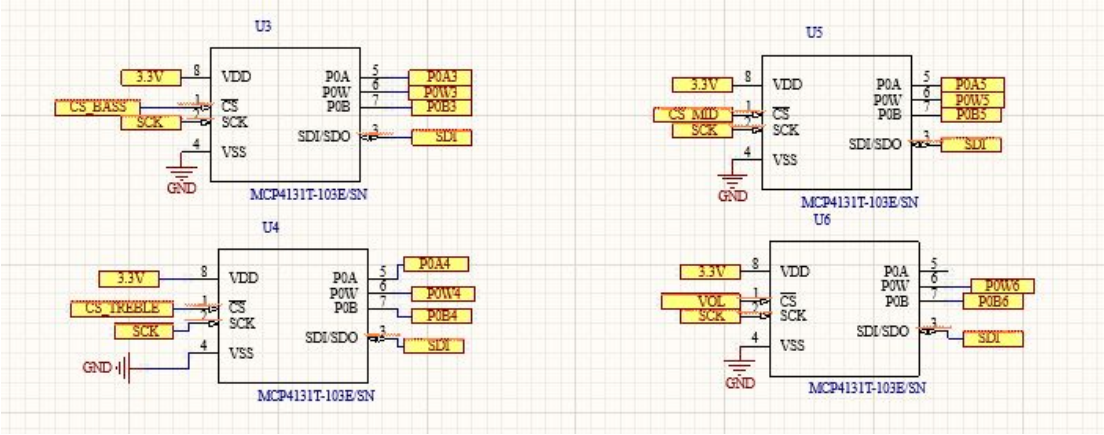

Subsystem 4 - Power System

Braeden Murdock

Accomplishments since 403 23 hrs of effort	Ongoing progress/problems and plans until the next presentation
• Rebuilt some of the Buck/boost subsystem for integration • Remade the preamplifier subsystem in altium • Tested and added more capacitors to help with voltage peak to peak on Power subsystem	• Integrate MCU onto Final board • Integrate preamplifier onto Final board • Test with both Cole and Jonathan that all the subsystems work together

Parts Ordering Status

To Be Ordered:

- Integrated PCB
- Finalized Component List
- Finalized Power Amp PCB

Ordered (Not Received):

- Updated MCU PCB & Additional Components (expected by this weekend)

Validation Plan

3	Test Name	Success Criteria	Methodology	Status	Responsible Engineer(s)
3.2.3.1	Verify input signal levels	Based on research, standard line level signal is 1.4Vpeak, need to ensure this as this is what preamp is biased around	Connect 3.5mm audio cable to source computer, Measure peak voltages to ensure amp isn't being over or underdriven	Tested	Cole Keating
3.2.3.2	Measure power amp heat dissipation	TPA3116 should not enter thermal protection during test	Place cooling solution on chip, power a 8 Ohm load for 30+ minutes without the FAULT pin on the IC going high (indicating thermal protection)	Tested	Cole Keating
3.2.3.3	Verify preamp output signal levels	Preamp output should never exceed 3Vpeak - From MAX9744 datasheet. Signal at max gain should not exceed this	Make sure 0dB bias level is below 10dB of 3V. Set input signal to 1.4V at a mixer frequency. Move potentiometer for max gain, verify output does not exceed 3V peak on oscilloscope.	Tested	Cole Keating
3.2.3.4	Verify power amp output signal level	Power amp output should be able to drive a 8 ohm speaker at 5W without clipping.	Place load on output, verify output levels do not clip.	Tested	Cole Keating
3.2.3.5	Verify THD parameters	THD < 5% at 1WRMS, THD <0.1% at 0.1W RMS	Use FRA mode on oscilloscope while driving a 1W and 0.1W load. Record THD levels.	Tested	Cole Keating
3.2.3.6, 3.2.4.2	Integration of MCU EQ Control	MCU is able to command digital potentiometer. Digital potentiometer controls preamp mixing, volume.	Connect digital potentiometers to pin headers on preamp. Run MCU test code that sweeps potentiometers. Verify digital potentiometer controls preamp, volume	Test in 404	Cole Keating Jonathan Roman
3.2.2	Verify Power levels	Based on research and simulations nothing in the circuit should exceed 2 Watts of power	Connect Power management subsystem to Power input and measure all outputs to make sure they are within the criteria	Tested	Braeden Murdock
3.2.2.1	Verify input voltage levels	Each subsystem needs varous input voltage supplies which are 12V, 5V, and 3.3V. The power management subsystem should output all desired levels of voltage	Measure output voltages of power management subsytem when powered on, by measureing the connectors that would lead to the other subsystems that need the Voltages described previously	Tested	Braeden Murdock
3.2.2.2	Verify input current	Each subsystem has current draw that needs to be matched for the system to work. These range from 16 mA, 0.5 A and 4mA	Set up load resistors that will have the required voltage draw and measure the current through each to make sure that the power management subsystem can match	Tested	Braeden Murdock

Validation Plan Continued

3.2.4.1	Verify Wireless Connection	MCU is able to connect wirelessly to a mobile device. Mobile Device is used to send signals translated by the MCU	Power the MCU with a 3.3V Source. Connect through a generic Bluetooth integration. Send and recieve signals	Tested	Jonathan Roman
3.2.4.1	Verify Wireless Connection With Mobile App	MCU is able to connect wirelessly to the Mobile App subsystem. Mobile App is used to send signals translated by the MCU	Power the MCU with a 3.3V Source. Connect through integrated Mobile App. Recieve and output signals	Tested	Hoation Guan Jonathan Roman
3.2.4.2	Verify Signal Translation	MCU correctly translates input signals to respective SPI output.	Connect wirelessly to the MCU. Send preset signal pairs and verify output	Tested	Jonathan Roman
3.2.4.2	Verify PCB implementation	MCU behaves as expected on PCB implementation	Connect wirelessly to the PCB integrated MCU. Send preset signal pairs and verify output	TESTING/Test in 404	Jonathan Roman
3.2.1.1	Verify the user feedback	Ensure UI give an feedback when use adjust the app setting.	When sliding the control slider, a small prompt appears below indicating the change has been applied. Additionally, a touch effect is displayed when the slider is touched.	Tested in 403	Haotian Guan
3.2.1.2	Verify data saving	Ensure the data stored in the app database, checking database won't lose any data once close the app.	A data storage page has been set up to save all changes, allowing users to view them at any time.	TESTING	Haotian Guan
3.2.1.3	Verify the login page	Ensure users can log in using their Google account or register by using the email. Confirm the firebase stored the accounts.	Use Firebase for Flutter to set up a login page with Google accounts. Click “Sign in as guest” to use the app immediately.	Tested in 403	Haotian Guan
3.2.1.4	Verify the BLE connection	Ensure standardized commands sent to the MCU via BLE	Using Flutter's flutter_blue_plus, find the Service UUID and Characteristic UUID of the MCU, and then the App sends 2 bytes [portal, value] to MCU, where portal select valume/bass/mid/treble and value is the user-selected level.	Tested	Haotian Guan Jonathan Roman
3.2.1.5	Verify the anto disconnection	Ensure the mobile app UI return to the connection page once disconnection with MCU	Returning back to connection page once the MCU disconnection with mobile app, and exceeding the notification will alert the user.	Testing	Haotian Guan

Execution Plan

Task	Winter Break	01/12/26	01/19/26	01/26/26	02/02/26	02/09/26	02/16/26	02/23/26	03/02/26	03/09/26	03/16/26	03/23/26	03/30/26	04/06/26	04/13/26	04/20/26
MCU PCB Design Completed																
403 Status Verification											Not Started					
Power and Amplifier Integration											In Progress					
Initial Bluetooth Connection											Completed					
MCU PCB Assembly											Behind Sch.					
Initial Status Presentation																
Kicad -> Altium Translation																
Integrated PCB Design																
Debug and optimize UI																
Debug Power Amp Design																
MCU PCB Validation																
Test Power Amplifier																
Casing CAD Design																
Integrated PCB Assembly																
Integrated PCB Testing																
Full System Assembly																
Finalize and Debug Project																
Engineering Project Showcase																

Team 12 – TI-Amplifier

Braeden Murdock
Cole Keating
Haotian Guan
Jonathan Roman

Thank you for your attention!
We appreciate your time and interest in our project.
We're happy to take any questions.